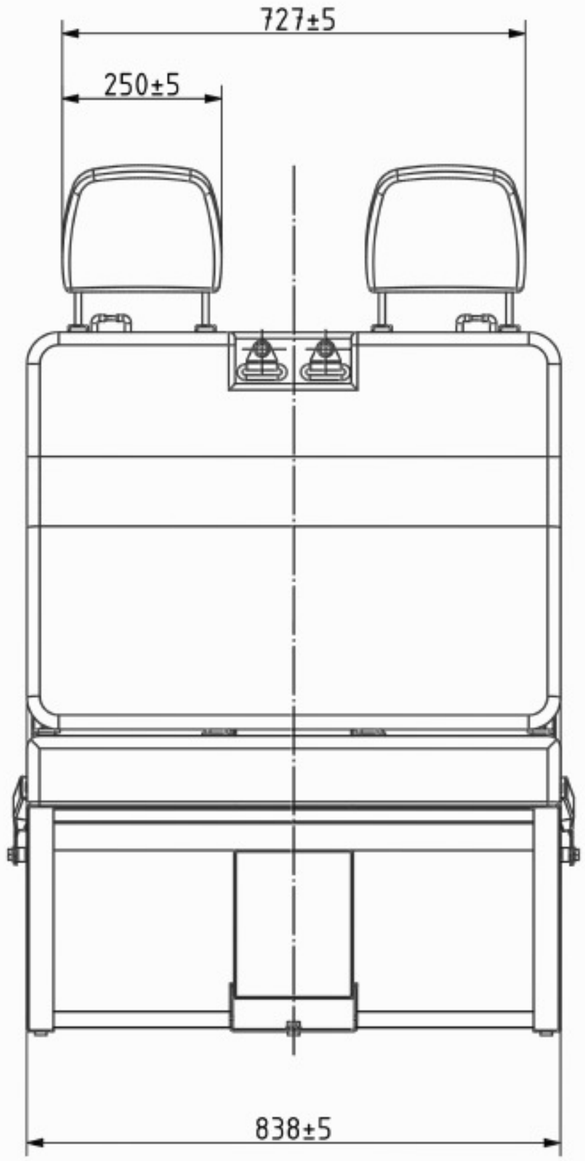

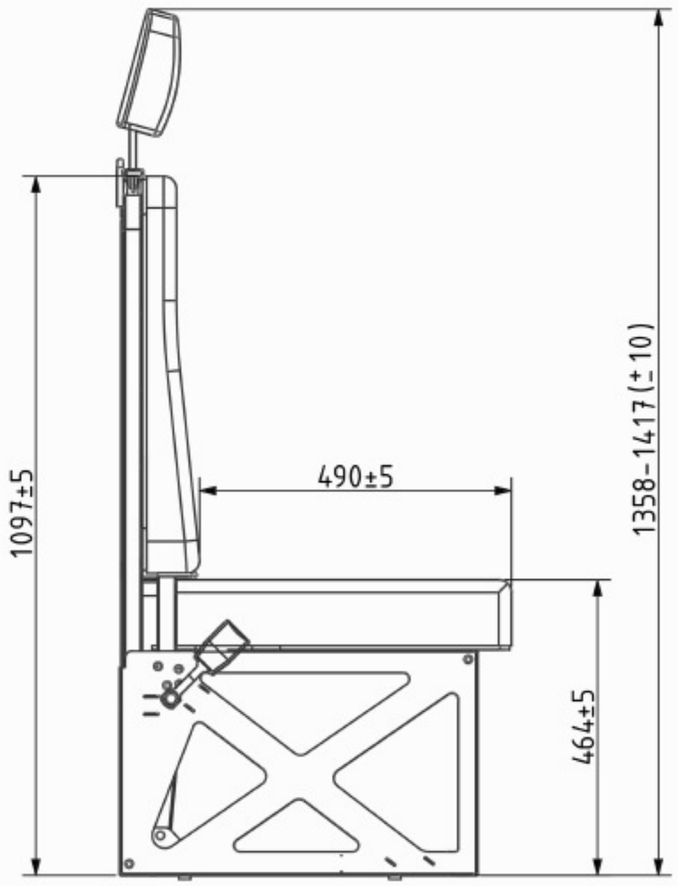

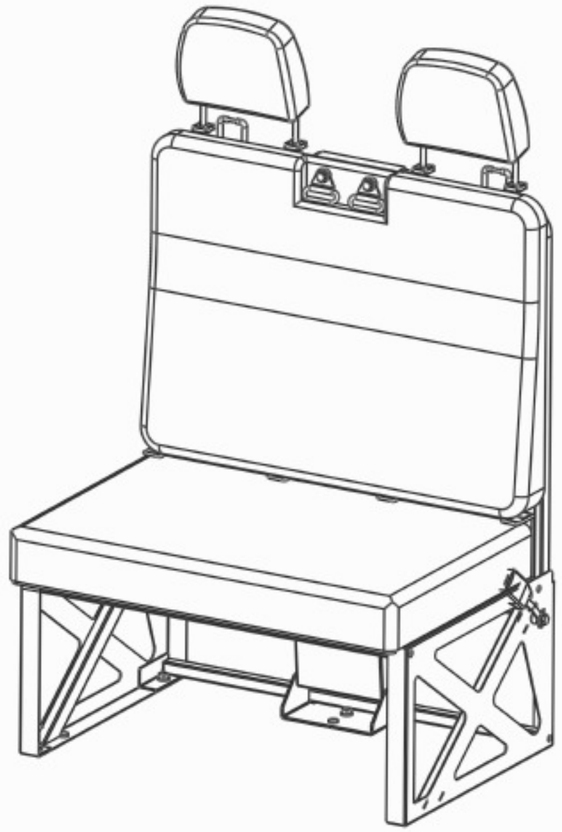

leisure vehicle
SERVICES